ndiv DIPPER VALVE | 地佩尔阀门

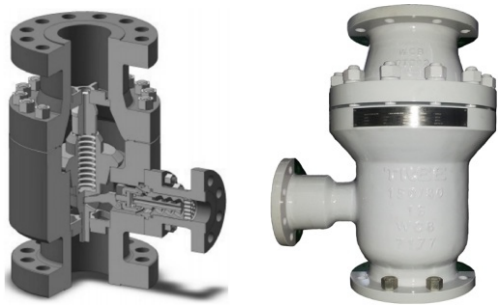

自动循环阀

最小流量保护阀、轴流式回流阀

Automatic Recirculation Valve

Minimum Flow Valve

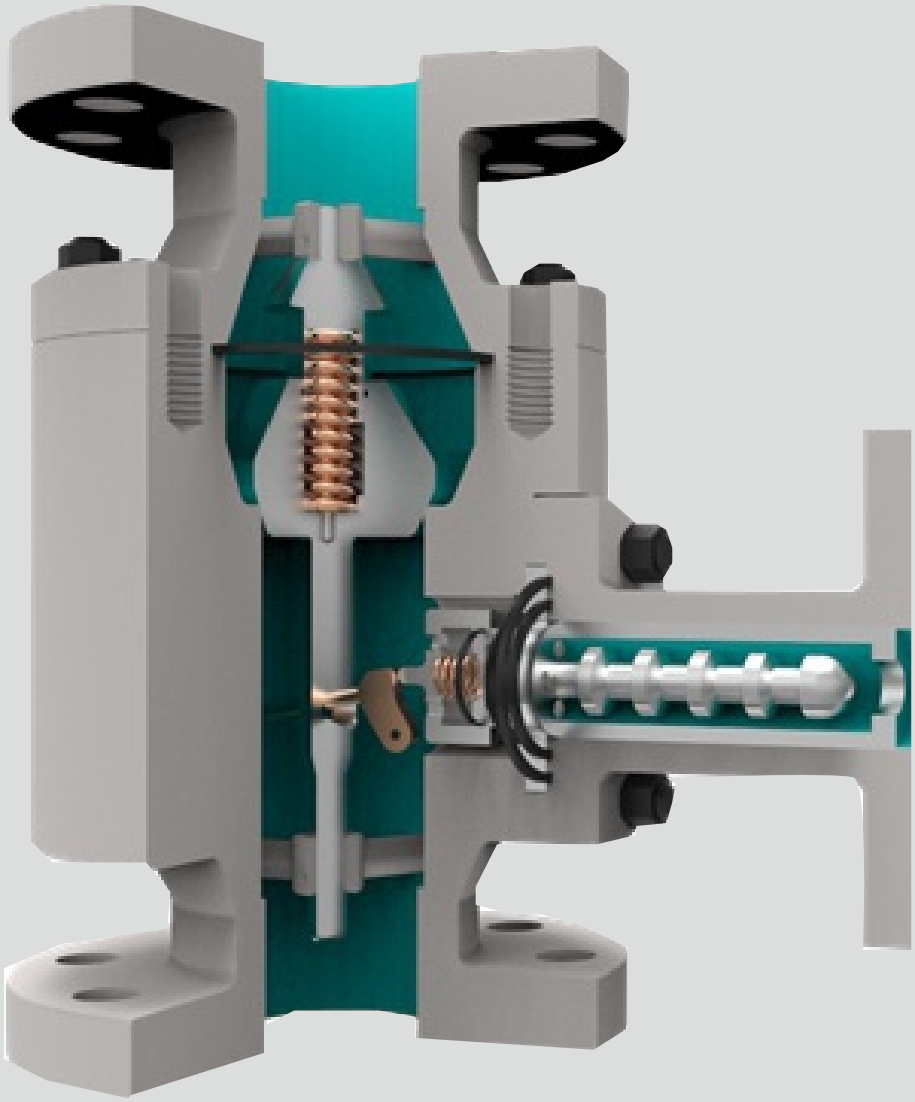

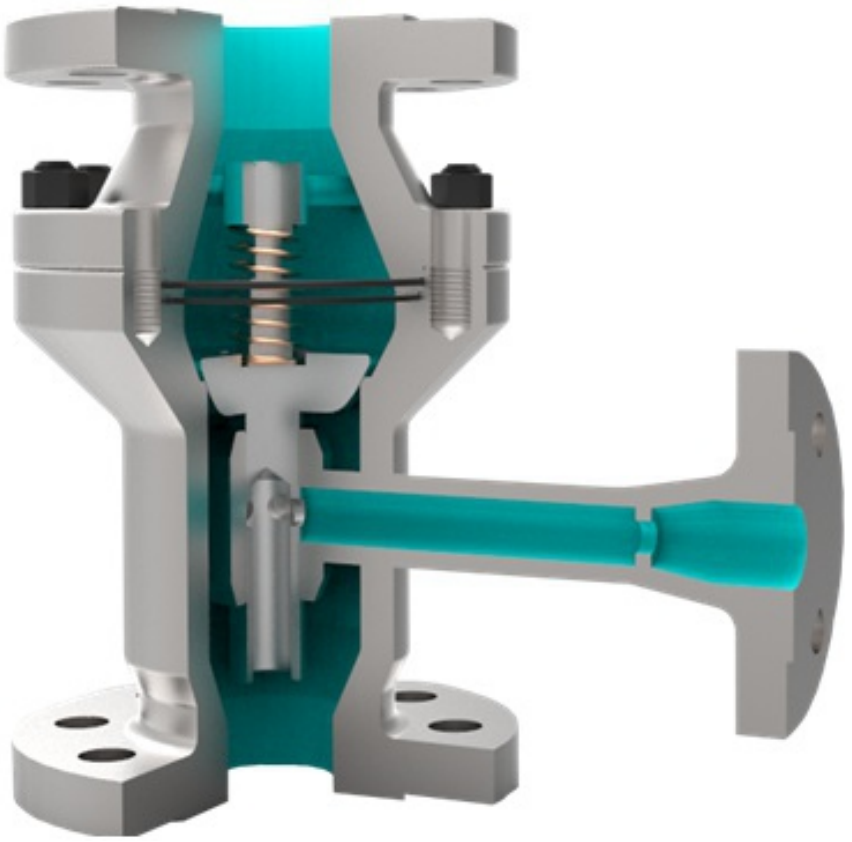

质量宣言：

产品性能安全可靠

QUALITY MANIFESTO: Safety And Reliability

质量目标：

追求一流品质

QUALITY OBJECTIVE: Pursue World First Class Quality

目录

Contents

产品型号编制方法
Product Model

80-50 RACH 06 H-RF/C

阀门类型
Version

轴流式回流阀
Automatic Recirculation Valve

密封面材料
Sealing Materials

P=PTFE
N=NYLON
P=PPL
H=合金钢 Alloy Steel
Y=硬质合金 Hard Alloy
W=本体 Body

端部链接
End Connection

PF=凸面法兰 Raised Flange
FM=凹凸面凹面法兰
Male and Female Face Flange
RJ=环连接法兰 Ring Joint

公称通径–旁路口径
Nominal Diameter-Bypass Size

与英制压力级对应公称管子直径（NPS）以in值表示与公制压力级对应阀门公称通径（DN）以mm值表示
In Imperial System,the unit of measurement for NPS is in inch, and in Metric System, the unit of DN is mm.

压力等级
Pressure Rating

01=Class150 PN1.6
02=PN2.5
03=Class300
04=Class400 PN4.0
06=Class600 PN6.3
09=Class900
10=PN10.0
15=Class1500
16=PN16.0
20=PN20.0
25=Class2500 PN25.0

阀体材质
Body Material

C=WCB/A105
CL=LCC
BL=LCB/LF2
P=CF8/304
PL=CF3/304L
R=CF8M/316
RL=CF3M/316L
O-其它 Others

注：要求抗硫化氢腐蚀阀门在材料代号后加“SR”表示
Note: After the material code, suffix“SR” to present sulfur-resistant.

产品范围表
Scope Of Supply

Pressure Class / NPS	150lb	300lb	400lb	600lb	900lb	1500lb	2500lb
1"	●	●	●	●	●	●	●
1–1/4"	●	●	●	●	●	●	●
1–1/2"	●	●	●	●	●	●	●
2"	●	●	●	●	●	●	●
2–1/2"	●	●	●	●	●	●	●
3"	●	●	●	●	●	●	●
4"	●	●	●	●	●	●	●
5"	●	●	●	●	●	●	●
6"	●	●	●	●	●	●	●
8"	●	●	●	●	●	●	●
10"	●	●	●	●	●	●	●
12"	●	●	●	●	●	●	●

自动循环阀性能特点
Automatic Recirculation Valve Application and Specification

泵的三种保护方式
Pump Protection Scenarios

■连续循环系统
Continuous Flow Scenario

推荐：★
Recommendation Rate: ★

循环流量与工艺流量的变化无关。回路经降压孔板直接回储罐。连续的最小流量循环虽然可以很好地保护泵，但是必须要求泵提供更大的输出功率，这样造成额外的能量浪费。

优点是投资较省。当工艺上出现小流量工况时，降压孔板旁路线自动将其消除。

缺点是不论工艺上需要多少流量，旁路线始终都有流量通过。选泵时应把旁路流量附加到操作流量上，否则易造成泵出力不够的情况。此方法的另一个缺点是操作费用较高。当泵的扬程很高，液体又处于饱和温度下时，限流孔板后可能发生气化，需要考虑孔板后管径能否适应两相流，另外返回管线与上游容器的接点宜处于气相区域。

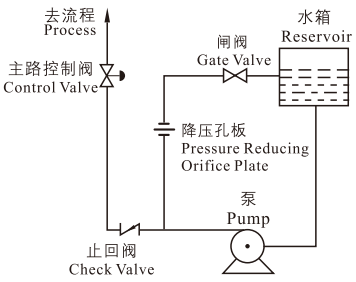

The bypass is constant operate and recirculate flow through orifice plate to reservoir, It's effective. However this continuous recirculation would requires oversized pump and leads to extra energy consumption.

Pros. Simple and effective system, cost saving in capital input.

Cons. No matter how much flow rate need in process, the bypass is in constant operation. Therefore the recirculation flow should be considered into the operation flow while selecting pump, otherwise, the pump capacity may be insufficient. Moreover, the larger capacity would cause higher operation cost. Furthermore, vaporization is easy to happen as it flows by the orifice plate as soon as the pump head is high and liquid under saturation temperature.

■控制循环系统
Control Recirculation Scenario

推荐：★★★
Recommendation Rate: ★★★

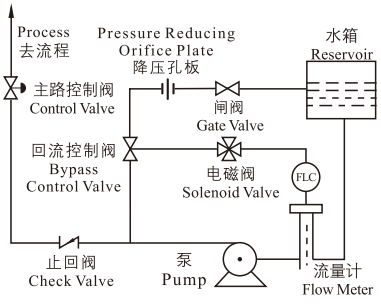

控制循环系统由止回阀、流量计、降压孔板、回流控制阀、电磁阀组成。控制循环系统能够提供最小流量保护，当工艺流量大时，回路关闭，没有额外的能量损失。但系统元件多，购买、安装、维护费用高。

优点是旁路线只有在小流量工况时才自动打开，平时关闭以节省运行能耗。选泵可不考虑旁路流量附加值。

缺点是一套自控回路系统复杂，控制元件多。购买、安装以及后期运行维护成本极高；控制系统受测量和传输元件灵敏度影响较大，旁路系统存在开启延迟和关闭滞后的情况。

Control recirculation scenario is consist of check valve,flow meter, pressure reducing orifice plate, bypass control valve and solenoid valve. This scenario could provide required minimum flow,As the main line flow increase the bypass control valve would close, no extra energy lose. However, it is a costly solution in procurement , installation and maintenance.

Pros. The bypass only automatically working during the low flow condition, otherwise, it is closed, therefore, it is not necessary to take the recirculation flow rate into consideration when selecting the pump.

Cons. The automatic recirculation scenario is complicate and with various control elements, it is a costly solution in procurement , installation and maintenance. The control system operation is highly affected by the sensitivity of measurement and transmit elements, therefore, there has the chance for bypass system late response.

■自控回流阀系统

Automatic Recirculation Valve Solution

推荐：★★★★★

Recommendation Rate: ★★★★★

自控回流阀集止回阀、流量感知元件、旁通控制阀、多级降压的功能于一体。无需动力源和信号源；采用静密封，无外漏；完全的无电连接，属本质安全型；减少了连接的数量，安装、维护费用低；

优点是集止回阀、流量感知旁路控制阀、多级降压功能于一体，不需要动力源和控制系统，不需要电气接线，本质安全。占用空间小，将高速流体造成故障的可能性减至最小。安装维护费用低。是现代工业过程中优先考虑的泵的保护方式。

缺点是设计和制造难度相对较大。

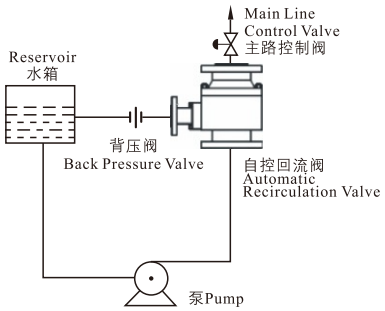

Automatic recirculation valve combine the check valve, flow meter, bypass control valve, multistage letdown function into one integration unit. No power or signal source needed, static seal design, zero leakage, zero electricity, intrinsic safety, minimized the connection point,saved installation and maintenance cost.

Pros. Automatic recirculation valve combine the check valve, flow meter, bypass control valve, multistage letdown function into one integration unit.No power or signal source needed, no electrical connection, intrinsic safety, minimized the installation space and the possibility of high velocity fluid flow, saved installation and maintenance cost. It is a preferred solution to pump protection.

Cons. It's more difficult to design and manufacture.

回流阀设计制造规范

Automatic Recirculation Valve Design Specification

设计制造	参照API 6D ASME B16.34 ASME Ⅷ
结构长度	NDIV－TSD2401
连接形式	法兰连接：RF、RJ
法兰标准	ANSI B16.5、GB、JB、HB等
检验和测试	API 6D、 API598 、ISO5208 、GB/T26480 、GB/T13927、TNDIV-TS2401

Design and Manufacture	Refer To API 6D ASME B16.34 ASME Ⅷ
Face to Face	NDIV－TSD2401
Ends Connection	Flange Connection: RF, RJ
Flange Standard	ANSI B16.5, GB, JB, HB etc.
Inspection and Testing	API 6D, API598 , ISO5208 , GB/T26480 , GB/T13927,TNDIV-TS2401

*如有特殊要求，可按客户具体要求设计生产。

*Customized design is available upon request.

自动循环阀产品概述
Automatic Recirculation Valve Overview

产品概述
General Information

新地佩尔轴流式回流阀是一种泵自动循环保护装置，对在低于最小流量下运行过载、过热汽化水泵造成损害进行保护；确保泵工作在安全流量以上。主要用于离心泵出口处，对泵提供最可靠、最经济的保护。使泵在低负荷运行时有小量介质再循环，保证泵的最小流量，维持泵的稳定运行，并具有止回功能，防止介质倒流，配合水泵最小流量再循环阀工作，维持系统的安全运行。

The automatic recirculation valve is an automatic pump protection equipment, it is utilized to protect the pump against overheating,cavitation during flow less than minimum flow condition and providing the required minimum flow through the pump. Whose primary installation place is at the pump outlet and provide the pump most reliable and economic protection. It is to provide the minimum flow recirculation under pump low loading operation in order to maintain the pump stable running,the ARV has check valve function to stop the back flow and with minimum flow recirculation function to maintain system safe operation.

功能及工作原理
Function and Working Principle

现代工业设备工艺过程中，要求离心泵基本上都是在变流量的状态下工作，这就需要在工艺过程中有设置自动控制设备。然而离心泵在低负荷运行时会出现过热、严重噪声、不稳定和气蚀而引起泵的损坏。这时需要一种自动再循环设备，在泵低负荷运行时，通过旁路实现泵最小流量回流循环。

In the modern industrial process, the centrifugal pump is always working under different flow, which requires automatic control element in the process. However the centrifugal pump may suffer from overheating,excessive noise,instability and cavitation during low flow condition. Therefore automatic recirculation equipment is needed to providing required minimum flow through the pump during the pump low flow condition.

新地佩尔阀门通过多年的研发，不断创新与实践，开发出系列回流阀，用于防止各种离心泵在低负荷运行时由于过热、严重噪声、不稳定和气蚀而引起的损坏。只要泵的流量低于一定数值，阀的旁路回流口通道就会自动的打开，以此来保证液泵所必须的最小流量。

With years research and development,continuous innovation and practice,Dipper Valve had launched automatic recirculation valve,to prevent centrifugal pump against the damage which may cause by overheating,excessive noise,instability and cavitation during low loading operation. Once the flow through the pump falls below a certain level the bypass system of the valve opens and the minimum flow required to hydraulic pump can be provided.

回流阀的功能，细化起来，主要有以下几个：

The Automatic Recirculation Valve function,in detail,as below:

◆流量感知功能：主阀瓣能自动感知工艺系统中的主流量，确定设备中流量的大小，并根据此流量来对应的确定阀芯的位置；

Flow sensing: The check valve disc sensing the main line flow, the disc of the check valve moves upwards with increasing main flow and downwards with decreasing flow.

◆再循环控制功能：回流阀可以将泵正常运行所需要的最小流量通过旁路吸入到存储装置中，调节泵的H－Q特性，实现流量控制；

Recirculation control: The automatic recirculation valve providing required minimum flow from its bypass to the storage device, and modulating the H-Q curve of the pump, achieve the flow control.

可将本正常运转所需的最小流量旁通到水箱或冷凝罐中，防止泵过热；
The bypass allows required minimum flow to be routed to water tank or condensate tank to prevent the pump from overheating.

◆旁路多级减压功能：旁路控制系统能低噪音小磨损的把回流介质从泵出口的高压减至适宜回流存储装置中的低压；

Multistage Letdown Function:The bypass section of the valve is designed to handle the required pressure drop from the process to the pump inlet with small noise and less flushing on bypass parts.

◆止回功能：阻止流体回流进入泵内，从而防止泵反转，达到保护泵的目的。

Check Valve Function: prevent against the reverse flow,the pump is protected from reverse rotation.

工作原理
Working Principle

介质经过阀门入口进入阀体，阀芯自动感知流量的变化，当主路出口流量小于设定值时，旁路开启，通过旁路循环，保证介质总的输出不低于最小流量。当出口流量大于所设定流量时，流体进入主管道中并逐渐关闭旁路，进行正常流动。其旁路及主流路的开启与关闭只与出口流量有关。当阀门的出口有流体倒流时，阀芯的逆向动作变成止回阀的工作过程。

The liquid flows into the valve,check valve disc automatically sensing the flow, when the flow falls below a certain level, the bypass of the valves opens and the flow can move from the pump through the bypass section and be recirculated to the front end of the pump. As the flow rise above the predefined amount, the main line of the valve opens, the bypass of the valve close and the bypass flow is inversely proportional to the main line flow. So when the main line gradually open, the bypass is gradually close. The open and close of main line and bypass is only related to the process flow rate. The reverse flow will cause the spring loaded disc return to its seat and check valve works.

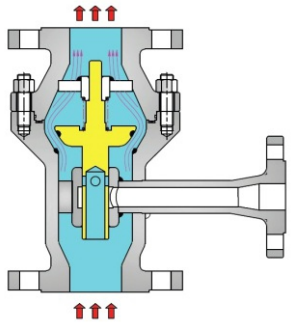

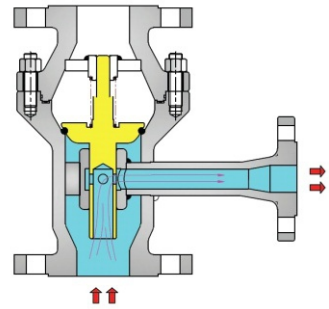

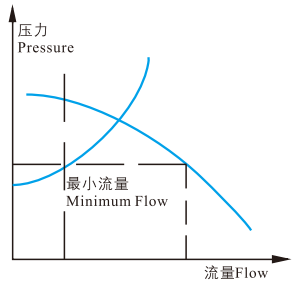

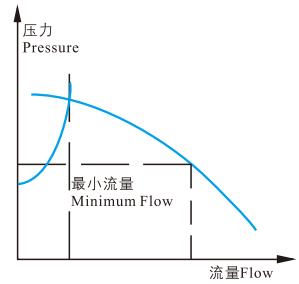

自动循环阀结构特点
Automatic Recirculation Valve Design and Features

结构形式 Design

名　称 Type	结 构 图 Sectional Drawing	使 用 范 围 Product Range
低压型 Low Pressure Type	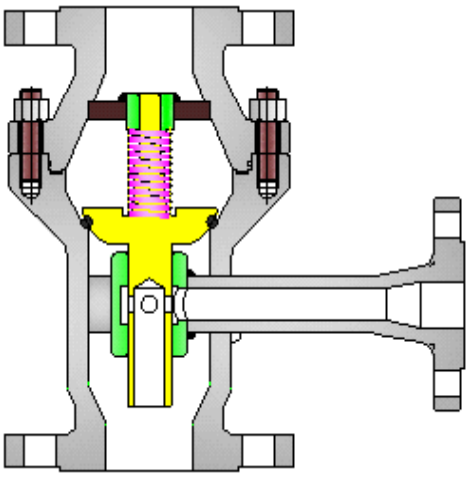	CLASS 150 ~ CLASS 400 PN16~PN63
高压型 High Pressure Type	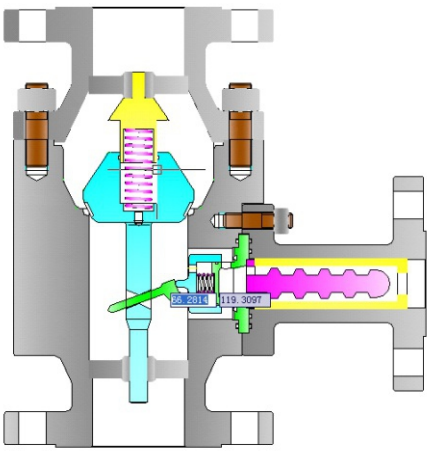	CLASS 600 ~ CLASS 2500 PN100~PN400

低压型
Low Pressure Type

稳定设计 Stable Design
前后双支承充分保证阀瓣运行的稳定性
The upper guide bush and lower guide bush (dual supports) design assures the stable operation of disc.

止回阀防止介质回流，感应流量的变化
Check valve prevent reverse flow and sensing the flow.

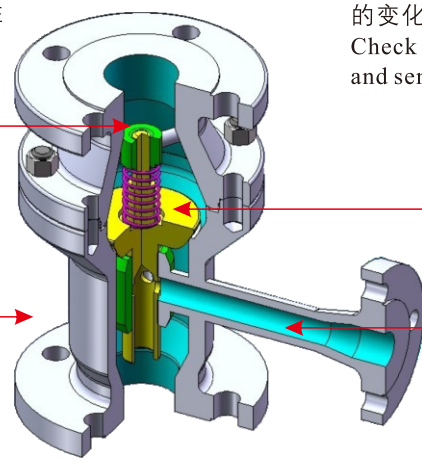

精确的再循环控制，通过理论计算、仿真分析以及试验验证为系统提供精确的再循环控制
Precision recirculation control, theoretical calculation,engineering analysis and inspection verification of ARV assures precise recirculation control.

旁路系统保证维持泵的最小流量
Bypass system maintain minimum flow through pump.

高压型
High Pressure Type

止回阀防止介质回流，感应流量的变化
Check valve prevent reverse flow and sensing the flow.

稳定设计 Stable Design
前后双支承充分保证阀瓣运行的稳定性
The upper guide bush and lower guide bush (dual supports) design assures the stable operation of disc.

旁路系统保证维持泵的最小流量
Bypass system maintain minimum flow through pump.

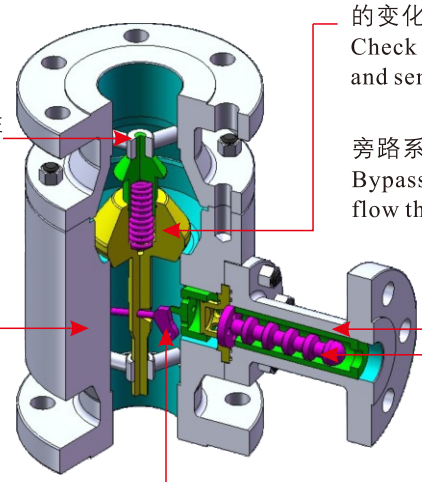

精确的再循环控制，通过理论计算、仿真分析以及试验验证为系统提供精确的再循环控制
Precision recirculation control, theoretical calculation,engineering analysis and inspection verification of ARV assures precise recirculation control.

旁路控制连杆
Lever to bypass system

多级减压连杆，将高压介质转换成低压介质
Multistage letdown unit handle the multistage pressure reduction.

自动循环阀结构特点
Automatic Recirculation Valve Design and Features

结构特点

◆功能强大

集流量感知、止回、控制流量和减压等功能于一体，简化系统,一阀多用。

◆自力式结构

阀门具有自动感知流量变化的功能，以决定回流量的大小，无须外部其他装置，全自力式运行，动作灵活可靠。

◆运行能耗低

主阀为一轴流式止回阀，直通型流道确保对介质具备小的阻力系数，介质通过阀门后压力损失小；旁路能根据流量变化自动调整旁路开度，正常运行时旁路为关闭状态，旁路不需要连续的流量，产品运行能耗低。

◆适用范围广

回流流量可选择范围广，根据泵最小流量的要求，旁路流量可设计范围为主流量的20%～80%。

◆密封性能好

主路的锥面密封形式，具有优良的对中性，使密封更加可靠。

◆使用寿命长

阀芯两级定位结构，阀芯运动稳定可靠，且阀芯选择耐蚀性能优异的材料制造，摩擦面经硬化处理，提高了阀芯和相应摩擦副的耐磨能力，提高内件的使用寿命，降低更换周期。

◆结构简单，使用、维护方便

产品结构简单，元件少，运动件少，使用维护方便。

应用范围

- ◆ 锅炉给水，冷却水，冷凝液设备
- ◆ 石油化工工业，冷藏设备
- ◆ 饮用水供给，废水处理系统
- ◆ 消防系统
- ◆ 注水泵
- ◆ 造纸厂，纸浆泵
- ◆ 造雪设备

自动循环阀结构特点
Automatic Recirculation Valve Design and Features

Features

◆Powerful Functions

The ARV integrate flow sensing, check valve, flow control and pressure letdown in one body, simplified the system, it is one valve with many functions.

◆Self Contained Design

The valve with automatic flow sensing ability, as the flow fall below a certain level, the bypass system opens and the fluid will be recirculated. No additional element required, it is a self-operating valve, the action is promptly and reliability.

◆Low Operation Energy Consumption

The main line is an axial flow check valve, straight flow paths of axial flow check valve assures small flow resistant coefficients and small pressure lose while flow through the valve; the bypass opens automatically as the main flow decreases and closes as the full main flow. Therefore, the bypass is not in continuously recirculation, which has minimized the product operation energy consumption.

◆Broad Applications

The recirculation flow across a wide range. The bypass flow can range from 20% to 80% of process main line flow as the required minimum flow of pump.

◆Good Sealing Performance

Main line conical sealing design provide well alignment, make the sealing more reliable.

◆Long Service Life

The lower and upper guide bush on the spindle, make the disc with spindle move stable and reliable. Furthermore, the well corrosive resistant material and the hardening treatment on sealing, had improved the disc with spindle and sealing pair's abrasive resistant ability, longer its' operation life, reduced its downtime.

◆Simple Structure, Low Maintenance

Simple structure, few parts, little move parts, easy to maintain.

Applications

◆Boiler Feedwater, Cooling System, Condensation Equipment

◆Petrochemical Industry,Refrigeration System

◆Drinking Water Supply System,Effluent Treatment System

◆Fire Fighting System

◆Injection pump

◆Paper Mill Pulp and Paper Pump

◆Snow Making Machine

自动循环阀主要零件及材料
Automatic Recirculation Valve Detail And Material

主要零件及材料
Detail and Material

■低压型 Low Pressure Type

主要由阀体、阀盖、阀芯、旁通体、弹簧、垫片、衬套等部件组成。

It is mainly consists of lower body,upper body,disc with spindle,bypass body,spring,gasket,bush etc.

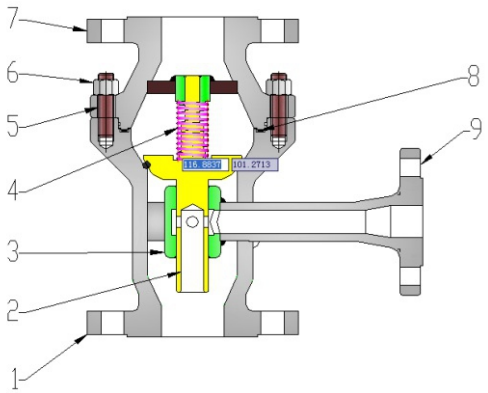

序号 Sr.	部件 Parts	部件 Parts	材料(常用) Material(Standard)		
1	阀体	Lower Body	WCB/A105	CF8/304	CF8M/316
2	阀芯	Disc with Spindle	13Cr	304	316
3	衬套	Guide Bushing	13Cr	304	316
4	弹簧	Spring	INCONEL X-750		
5	螺柱	Bolt	A193-B7	A193-B8	A193-B8M
6	螺母	Nut	A194-2H	A194-8	A194-8M
7	阀盖	Upper Body	WCB/A105	CF8/304	CF8M/316
8	垫片	Gasket	304+石墨 Graphite	304+石墨 Graphite	304+石墨 Graphite
9	旁通体	Bypass Body	WCB/A105	CF8/304	CF8M/316

自动循环阀主要零件及材料
Automatic Recirculation Valve Detail And Material

■高压型 High Pressure Type

主要由阀体、阀盖、阀芯、旁通体、弹簧、垫片、衬套等部件组成。
It is mainly consists of lower body,upper body,disc with spindle,bypass body,spring,gasket,bush etc.

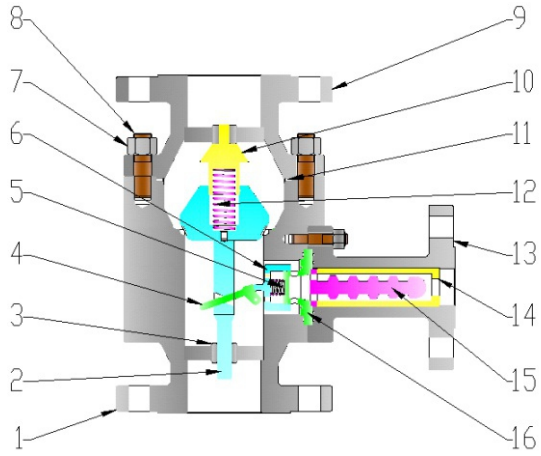

序号 Sr.	部件 Parts	部件 Parts	材料(常用) Material(Standard)		
1	阀体	Lower Body	WCB/A105	CF8/304	CF8M/316
2	阀芯	Disc with Spindle	13Cr	304	316
3	衬套	Guide Bushing	13Cr	304	316
4	联动杆	Lever	13Cr	304	316
5	弹簧	Spring	INCONEL X-750		
6	启闭件	Control Head	13Cr	304	316
7	螺母	Nut	A194-2H	A194-8	A194-8M
8	螺柱	Bolt	A193-B7	A193-B8	A193-B8M
9	阀盖	Upper Body	WCB/A105	CF8/304	CF8M/316
10	弹簧座	Spring Guide	13Cr	304	316
11	垫片	Gasket	304+石墨 Graphite	304+石墨 Graphite	316+石墨 Graphite
12	弹簧	Spring	INCONEL X-750		
13	旁通体	Bypass Body	WCB/A105	CF8/304	CF8M/316
14	再循环阀笼	Bypass Bushing	13Cr	304	316
15	再循环阀芯	Bypass Plug	13Cr	304	316
16	再循环阀座	Bypass Seat	13Cr	304	316

自动循环阀采购技术参数表

Automatic Recirculation Valve Technical Data

采购指南

轴流式回流阀采购技术参数表			
文件编号:			
轴流式回流阀	产品型号		
设计制造标准			
主要性能参数	公称通径		
	公称压力		
	回流口径DN2		
	安装方式	立式□ 卧式□	
	最高操作压力		
	最高工作温度		
	最低工作温度		
	最高环境温度		
	最低环境温度		
	介质		
	介质密度		
	介质组分		
	流量	最大流量Q_{max}	
		设计流量$Q_{100\%}$	
		$Q_{100\%}$时的扬程	
		泵最小流量Q_{BY}	
		Q_{BY}时的扬程	
端部连接形式	介质源（泵入口）压力		
	旁路是否带止回阀		是□ 否□
	法兰连接	法兰标准	
		法兰密封形式	
	客户特殊要求		

轴流式回流阀采购技术参数表				
文件编号:				
阀门结构长度	公司标准	是□ 否□		
检验试验标准				
油漆	一般	是□ 否□	特殊要求	
其他特殊要求：				

注：超出本资料范围或有其他特殊要求，请向我公司咨询。

自动循环阀采购技术参数表

Automatic Recirculation Valve Technical Data

Please Fill In The Data Sheet While Send ARV Inquiry To Dipper

Automatic Recirculation Valve Technical Data			
Reference No.:			
Automatic Recirculation Valve	Valve Model No.:		
Design and Manufacture Standard			
Pipeline and Process Information	Nominal Diameter		
	Pressure Rating		
	Bypass Outlet DN2		
	Installation	Vertical ☐	Horizontal ☐
	Maximum Operating Pressure		
	Maximum Working Temperature		
	Minimum Working Temperature		
	Maximum Environment Temperature		
	Minimum Environment Temperature		
	Medium		
	Medium Density		
	Medium Composition		
	Flow Rate	Maximum Flow Q_{max}	
		Design Flow $Q_{100\%}$	
		The Head In $Q_{100\%}$	
		Pump Minimum Flow Q_{BY}	
		The Head In Q_{BY}	
End Connection	(Pump Inlet) Suction pressure		
	Bypass with Check Valve Or Not?		YES☐ NO☐
	Flange Connection	Flange Standard	
		Flange Sealing Type	
	Customized Requirements		
Automatic Recirculation Valve Technical Data			
Reference No.:			
Valve Face To Face Dimension	Dipper Company Standard	YES☐ NO☐	
Inspection And Testing Standard			
Painting	Standard	YES☐ NO☐	Special Requirements
Others			

Note: Customized Design Is Available Upon Request

TS 证书
编号：TS2710170-2013

API 6D证书
编号：6D-0965

ISO 9001证书
编号：00514Q20539ROM

CE证书
编号：01 202 CHI/Q-09 0376

GB/T24001/ISO14001证书
编号：CNAS C026-E

GB/T28001/OHSAS18001证书
编号：CNAS C026-S

API 607证书
编号：06-5031-SQ 00514

API 607证书
编号：01 202 CHN/K -140121

API 6FD证书
编号：GD1.1(BJ、CHI) -FS-11-0003

API 6FA证书
编号：01 202 CHN/K -140120

四川名牌
编号：100258

自贡新地佩尔阀门有限公司

地址：自贡市高新工业园区玉川路12号
邮编：643000
电话：0813-825 3786　810 4890
传真：0813-810 4921
网址：www.dippervalve.cn
外贸邮箱：intlsales@dippervalve.com
销售邮箱：dprvalve@163.com

ZIGONG NEW DIPPER VALVE CO. ,LTD.

Add.:No.12 Yuchuan Road,High-tech Industrial Park,Zigong,Sichuan Province P.R.C
Zip Code:643000
Tel.: +86-813-810 4890
Fax: +86-813-810 4921
Website: www.dippervalve.com
E-mail: intlsales@dippervalve.com